Metal Shaper

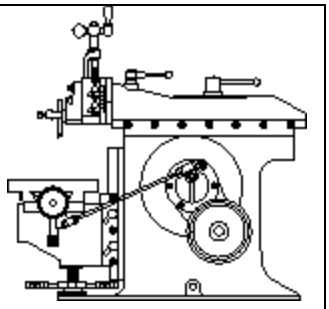

The Student is able to demonstrate safe and correct performance of the following:	**Date**	**Sign-off**	**Notes**
1. Operates only with instructor's permission and after receiving proper instruction.			
2. Removes jewelry, eliminates loose clothing, and confines long hair.			
3. Makes sure all guards are in place and operating correctly.			
4. Always uses proper personal protective equipment.			
5. Makes adjustments while the machine is stopped and runs through one cycle by hand as a check for clearance.			
6. Makes sure all guards are secure before starting the machine.			
7. Ensures the work is securely held in the vise or holding device.			
8. Avoids standing directly in front of the ram.			
9. Keeps hands away from the work point or possible pinch point of the shaper.			
10. Never lays tools or tooling on any part of the machine.			
11. Never removes chips while the machine is in motion.			
12. Makes sure the shaper comes to a full stop before leaving the machine.			